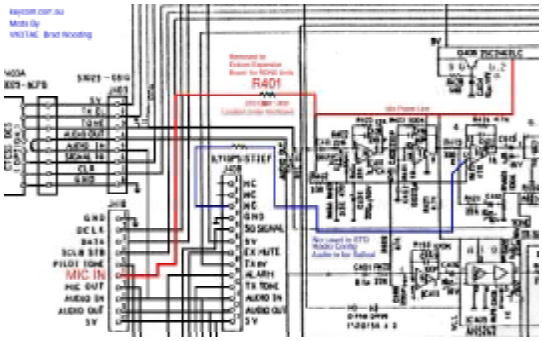
R401
MIC IN